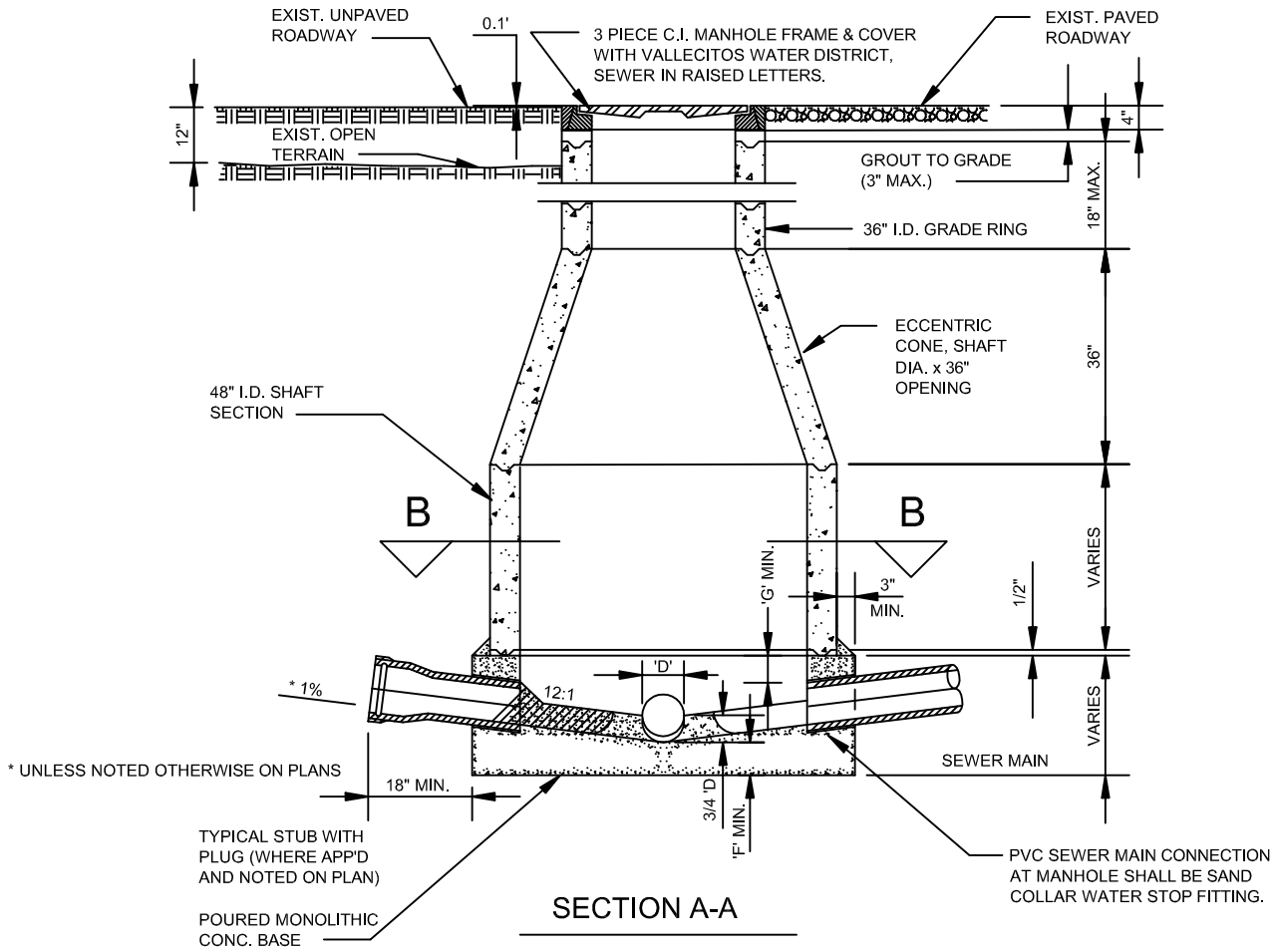

SECTION A-A

NOTES

1) ALL PIPE AND FITTINGS IN DROP CONNECTION SHALL BE THE SAME SIZE AND MATERIAL AS MAIN LINE UNLESS OTHERWISE SHOWN ON THE PLANS.
2) BITSUMASTIC SHALL BE USED ON ALL MANHOLE JOINTS, EXCLUDING GRADE RINGS.
3) MANHOLES SHALL BE 60" DIAMETER (MIN.) FOR SEWER MAIN 15" AND LARGER.
4) MANHOLES 60" DIAMETER AND LARGER SHALL HAVE A PROTECTIVE LINING SYSTEM. PROTECTIVE LINING SHALL BE PER CURRENT VWD STANDARD SPECIFICATIONS.

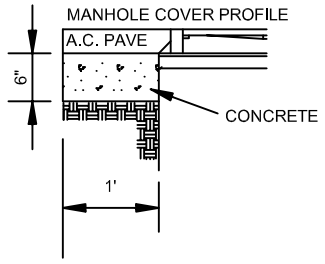

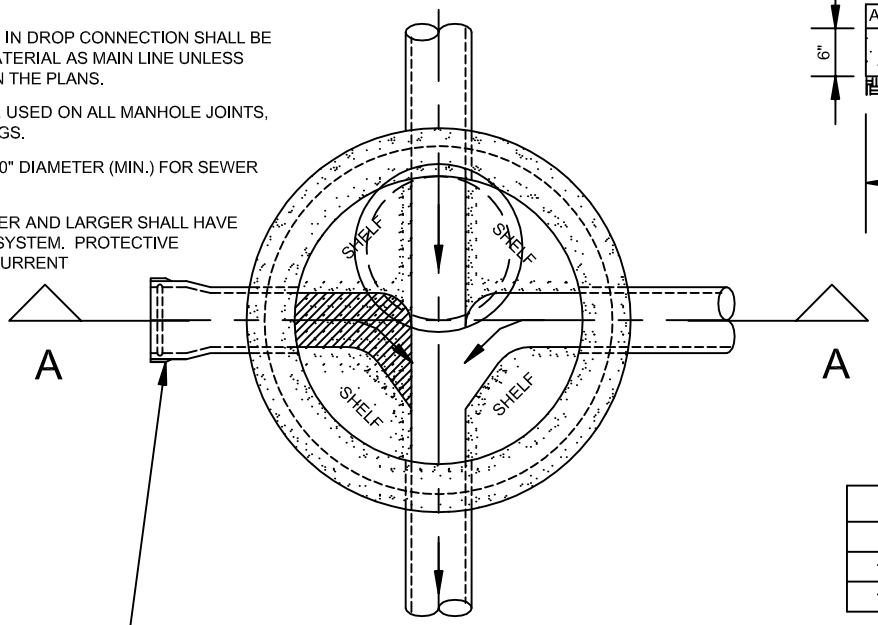

SECTION B-B

NOTE:

SHEAR COUPLINGS ARE REQUIRED WHEN BELLED ENDS ARE NOT USED.

MINIMUM DIMENSIONS:
(All Manhole Types)

'D'	'F'	'G'
6" to 8"	6"	4"
10" to 15"	6"	4"
18" to 27"	12"	4"

DIMENSIONS 'F' & 'G' SHALL BE USED FOR 'D' (INSIDE DIA. OF PIPE) OF THE LARGEST PIPE IN THE MANHOLE.

REVISIONS		
DESCRIPTION	APPROVED	DATE
REMOVE STEPS & REVISE "F" & "G"		7-24-07
ROTATED SECTION		10-17-11
PROTECTIVE LINING NOTE ADDED		3-27-17

VALLECITOS WATER DISTRICT STANDARD DRAWING

STANDARD MANHOLE

DATE: JULY 2015

BY:

Drawing No.

S-1